CEME

FLUID CONTROL COMPONENTS

Coffee

Beverage

Refrigertation
Air-conditioning

Steam

Medical

Welding

Water
Management

Other-Industrial

Liquid Dispensing Valve

www.cemegroup.com

Dispensing Solenoid Valve

Description

The new CEME Dispensing Valve is a 2/2 way , direct acting valve with total media separation by diaphragm.
This valve is normally closed with a nominal diameter of DN 10 mm.
CEME's Dispensing Valve is mainly designed to dispense water, or similar media from a tank (*gravity fed*).
It is expected meant to operate with an intensive duty cycle and it is suitable for hot and cold water.
It has an innovative adjustable flow rate (*0-100%*) by screwless system, that can be oriented in two opposite positions, allowing also the mounting of the valve flat to the front of machine.
Main applications are: coffee machine, vending units, juice and beverage dispenser

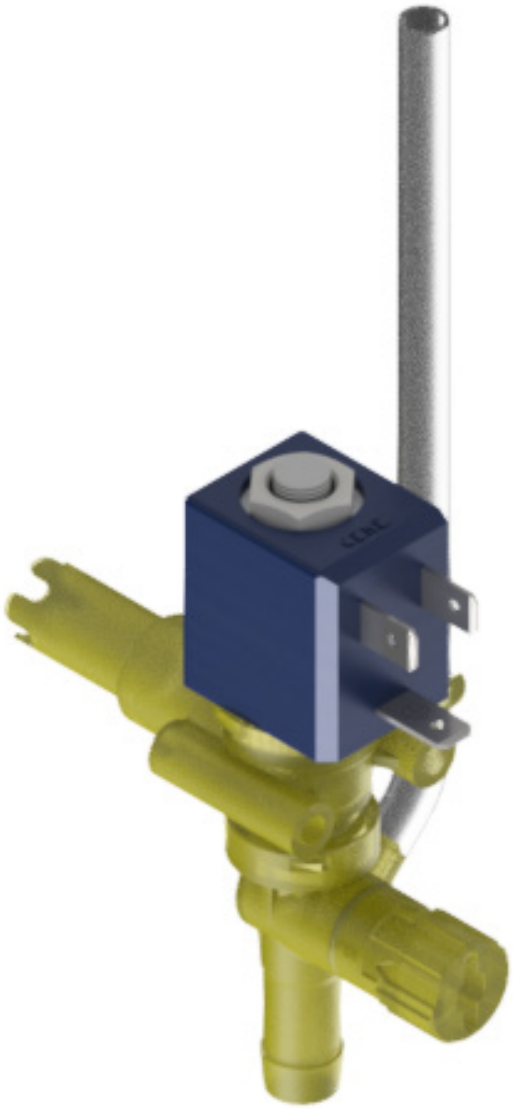

Characteristics

- Direct acting
- Normally closed
- total media separation by diaphragm
- removable outlet nozzle
- long life material
- suitable for food as well as hot water
- working from zero pressure
- Flow rate adjustable
- DN 10 mm (*0.39 inches*)
- 100% tested with water and air

Materials

Hydraulic body : PSU
EPDM Seals: all the seals are in EPDM
Material approvals: FDA, DM174, ACS, NSF,WRAS, DVGW

Applications

- coffee maker machine
- soluble coffee machine
- Hot / cold drink dispenser
- vending machine (hot dispenser)
- Juice dispenser
- tank / boiler draining

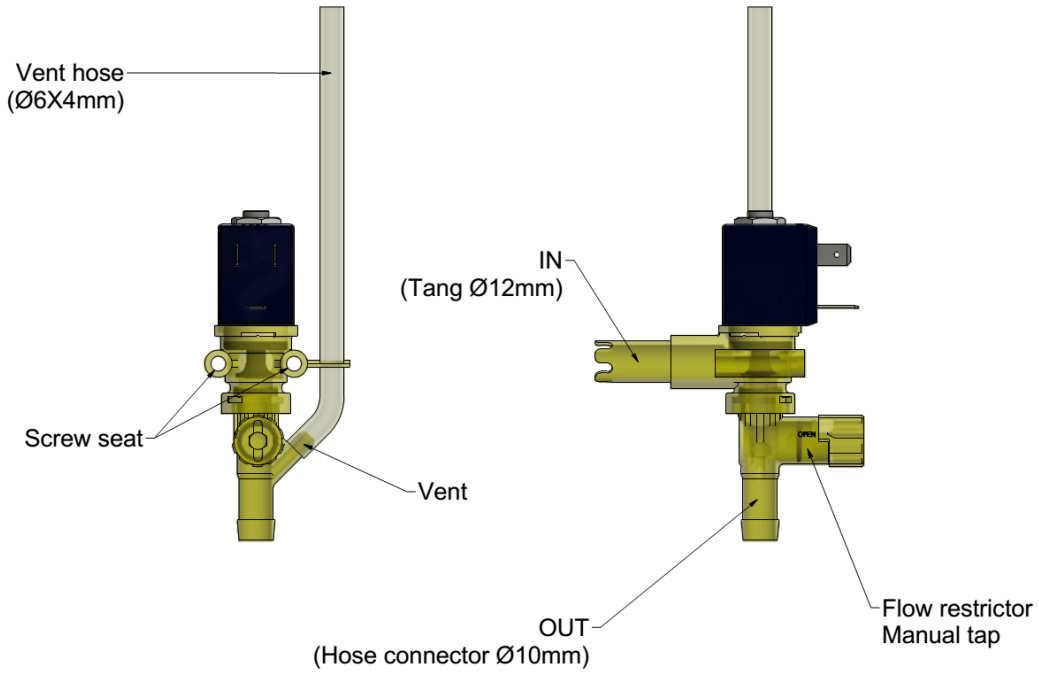

Characteristics

Working pressure: 0 ÷ 0.1 bar (*1.45 PSI max*)

Pressure burst: According to EN60730

Flow: adjustable at nozzle

Orifice: Ø **10 mm /** Ø **0.39 inches**

Function: normally closed

Flow direction: Uniderectional

Valve position: Any position

Fluid: Tap water / Hot water / Other food liquid

Heating class: H according with EN 60 335-1

Fluid Temp: 6° ÷ 98°C (*43° ÷ 208° F*)

Ambient Temp: 5° ÷ 70°C (*41° ÷ 158° F*)

Overall Dimension

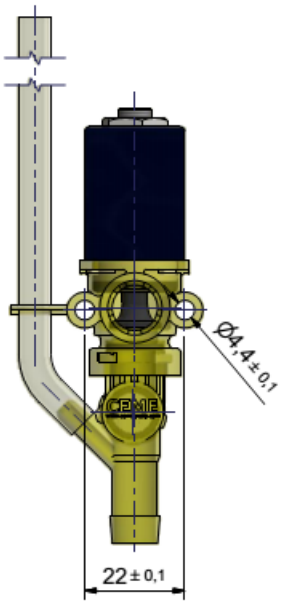

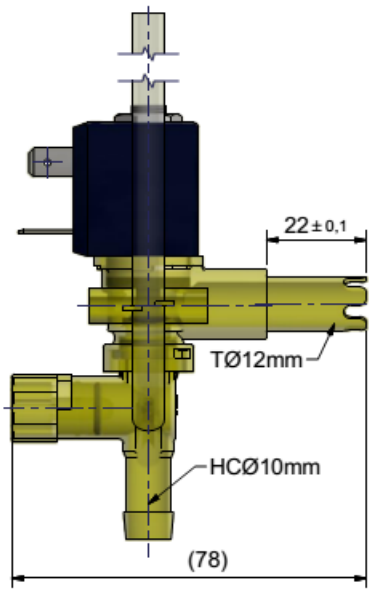

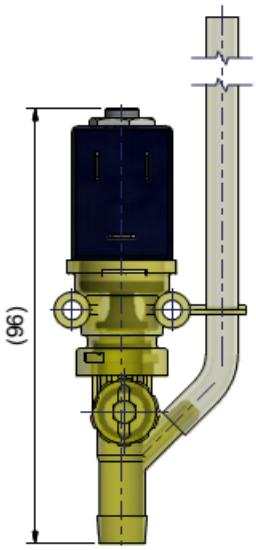

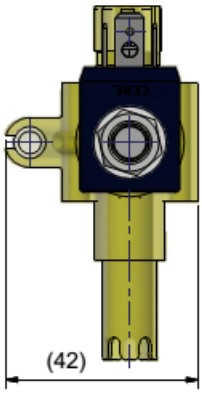

Flow regulation system

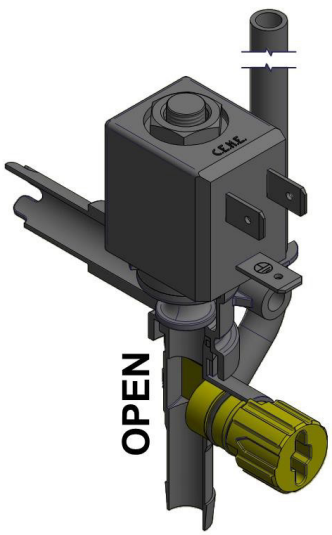

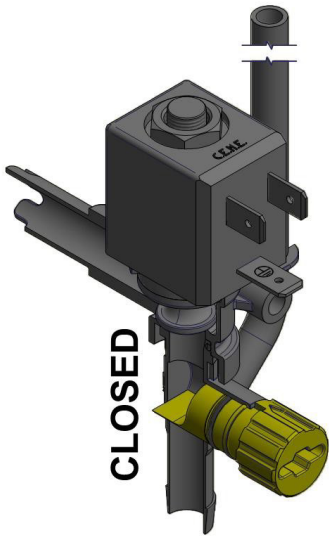

CEME SPA
Uffici e Stabilimento
Via delle Industrie, 5
20061 Carugate (MI)

Tel. +39 02 9215621
Fax +39 02 92150083
info@cemegroup.com
www.cemegroup.com

CEME ZHONGSHAN CO.LTD
Industrial Road, nr.38
528415 Xiaolan Town, Zhongshan City,
Guangdong Province, P.R. China

Ph. +86 760 22288986
Fax +86 760 2288987

CEME USA
33801 Curtis Blvd, nr.110
44095 Eastlake,
OHIO

Ph. +1 440 2263200
Fax +1 440 4244970